Mobile Phone Detection System Using ESP32 and Metal Detector

Introduction

The increasing use of mobile phones in restricted environments such as schools, examination halls, and secure workplaces has created a need for reliable detection systems. Unauthorized mobile phone usage can lead to distractions, cheating during exams, or security breaches.

This project proposes a Smart Mobile Phone Detection System that combines metal detection and wireless signal monitoring to identify the presence of mobile phones near a checkpoint. The system uses an ESP32 microcontroller to detect nearby Wi-Fi signals and integrates a metal detector module to confirm the presence of metallic objects.

By combining both signals, the system calculates a probability score indicating whether a person is carrying a mobile phone. The results are displayed on a web dashboard hosted by the ESP32, allowing real-time monitoring through a mobile phone or computer.

Objectives

The main objectives of this project are:

1. Detect nearby wireless devices using Wi-Fi signal scanning.
2. Detect metallic objects using a metal detector module.
3. Estimate the distance of wireless devices using RSSI (Received Signal Strength Indicator).
4. Combine both detections to estimate the probability of a mobile phone being present.
5. Display real-time detection results through a web interface.
6. Provide a low-cost and portable solution for schools and exam halls.

System Overview

The system works by combining two detection mechanisms:

1. Metal Detection
   A metal detector module senses metallic objects near the device. Since mobile phones contain metallic components, this helps confirm the presence of a physical object.

2. Wi-Fi Detection
   Mobile phones continuously emit wireless signals while searching for Wi-Fi networks. The ESP32 operates in continuous mode to monitor these wireless packets.

Decision Logic

The system uses a probability model:

Condition	Probability
Metal detected + Wi-Fi within 10–20 cm	80% (Mobile phone likely)
Wi-Fi detected but farther away	50%
Metal detected only	30%
No detection	0%

Hardware Components

Component	Description
ESP32 Development Board	Main microcontroller with Wi-Fi capability
Metal Detector Module	Detects metallic objects
Connecting Wires	Electrical connections
Power Supply / USB	Power for ESP32
Laptop / Smartphone	To view the web dashboard

Software Requirements

Software	Purpose
Arduino IDE	Programming the ESP32
ESP32 Board Package	Microcontroller support
WiFi Library	Network communication
WebServer Library	Hosting the web dashboard

ESP WiFi Library	Wi-Fi packet monitoring

Circuit Diagram

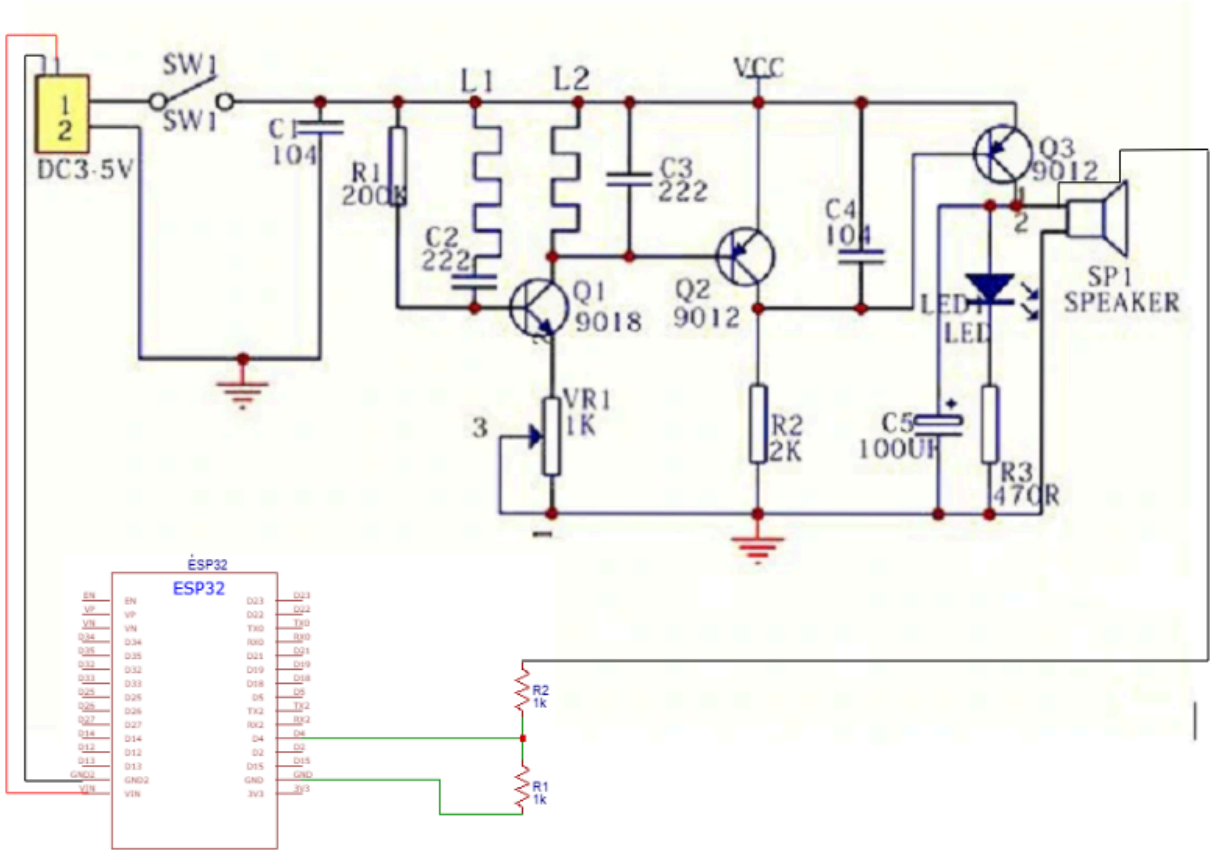

System Architecture

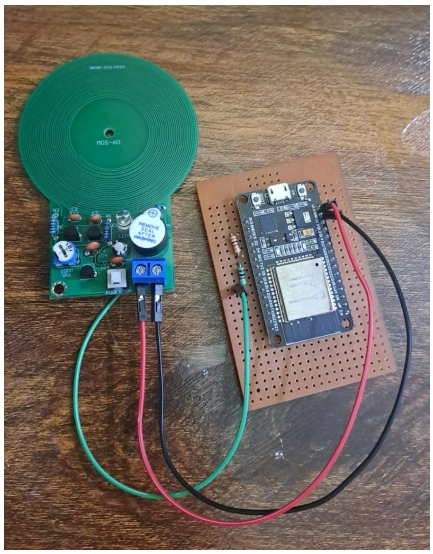

The system architecture consists of three major modules:

1. Detection Module

- Metal detector
- Wi-Fi packet sniffer

2. Processing Module

- ESP32 microcontroller
- Signal analysis and probability calculation

3. User Interface

- Web server running on ESP32
- Web dashboard showing detection results

Flowchart

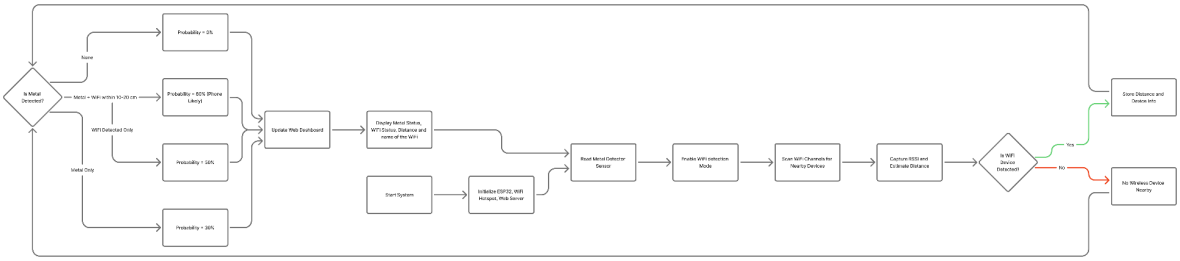

Data Flow:

Metal Detector → ESP32 Processing
WiFi Sniffer → ESP32 Processing
ESP32 → Probability Calculation
ESP32 → Web Dashboard
User → Monitor Results

Working Principle

Step 1: System Initialization

The ESP32 starts a Wi-Fi hotspot and initializes the web server.

Step 2: Metal Detection

The ESP32 reads the digital signal from the metal detector module.

Step 3: Wi-Fi Monitoring

The ESP32 scans nearby wireless packets and detects Wi-Fi devices.

Step 4: Distance Estimation

Signal strength (RSSI) is used to estimate the distance of detected devices.

Formula used:

Distance = 10 ^ ((TxPower - RSSI) / 20)

Step 5: Probability Calculation

Based on metal detection and Wi-Fi proximity, the system calculates the probability that a mobile phone is present.

Step 6: Web Dashboard Update

The ESP32 sends updated data to the webpage every second.

Web Dashboard

The ESP32 hosts a web interface that displays:

- Metal detection status
- Wi-Fi detection status
- Nearby hotspot names
- Estimated device distance
- Mobile phone probability indicator

The dashboard uses HTML, CSS, and JavaScript for real-time updates.

Color indicators:

Color	Meaning
Green	No phone detected
Yellow	Possible device nearby
Red	High probability of phone

Algorithm

Wi-Fi Detection Algorithm

1. Enable ESP32 Network Monitoring mode
2. Capture Wi-Fi management packets
3. Measure RSSI values
4. Estimate device distance
5. Store detected devices

Probability Algorithm:

```
IF metal is detected AND distance ≤ threshold:
   probability = 80%
ELSE IF wifi is detected
   probability = 50%
ELSE IF metal is detected
   probability = 30%
ELSE
   probability = 0%
```

Advantages

- Low cost solution
- Real-time monitoring
- Wireless access via web interface
- Portable and easy to install
- No external server required

Limitations

- Distance estimation using RSSI is approximate.
- Phones in airplane mode may not emit Wi-Fi signals.
- Non-phone devices with Wi-Fi may trigger detection.
- Metal objects such as keys may cause false positives.

Applications

- School mobile phone detection
- Examination halls
- Secure workplaces
- Libraries
- Restricted laboratories

Future Improvements

Possible improvements include:

- Using multiple ESP32 sensors for directional detection
- Adding Bluetooth scanning
- Implementing machine learning for better classification
- Integrating camera-based verification
- Building a walk-through detection gate

Conclusion

This project demonstrates a low-cost smart mobile phone detection system using ESP32 and metal detection technology. By combining wireless signal monitoring and metal sensing, the system can estimate the probability of a mobile phone being present near a checkpoint.

The real-time web dashboard provides an easy and effective way to monitor detection results. With further improvements, the system can be expanded into a full-scale mobile phone detection solution for schools and secure environments.